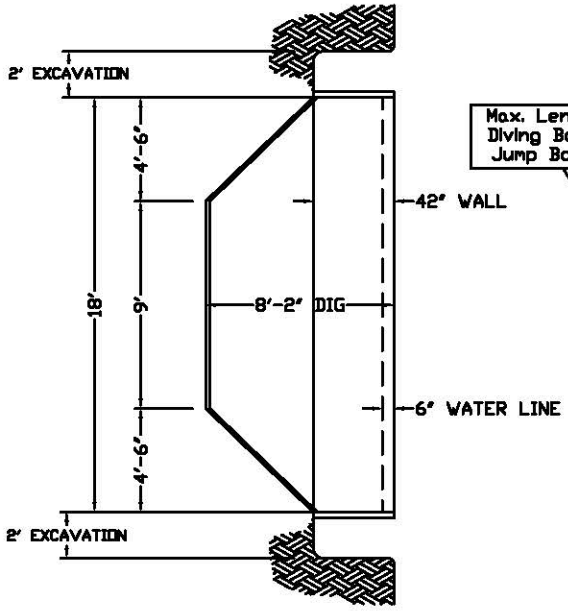

4R polymer pools include a 2R reverse

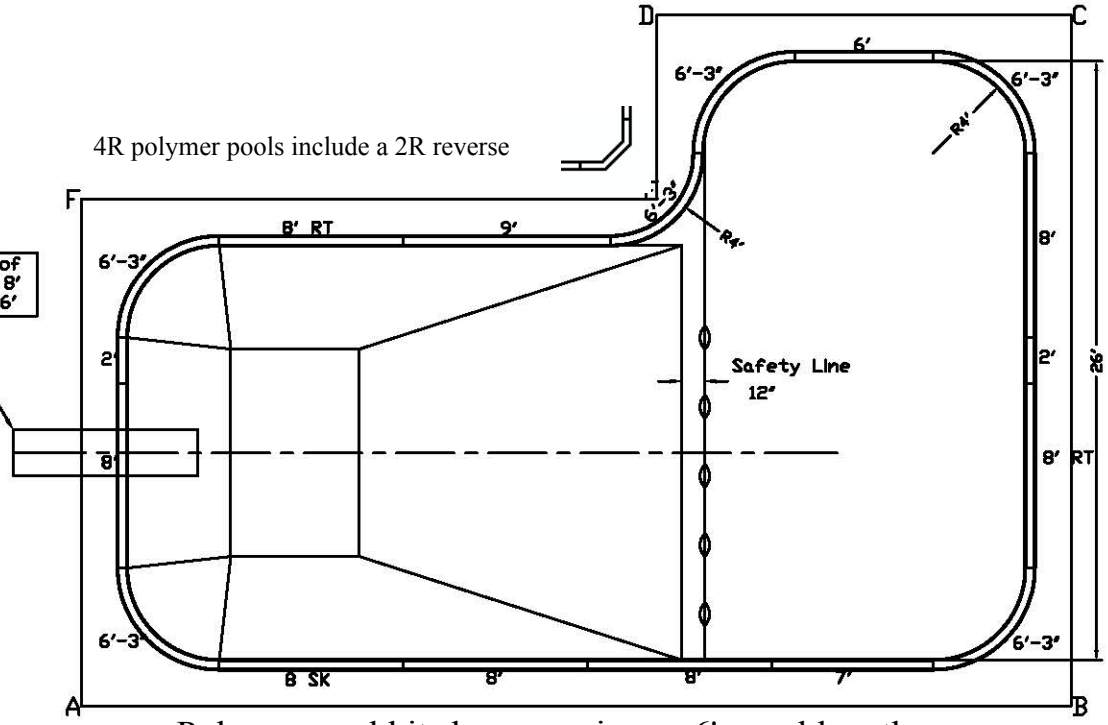

Polymer pool kits have maximum 6' panel length

STAKE OUT	
A-C	52'-5 1/8"
A-E	33'-3 5/8"
B-D	34'-11 7/8"
B-E	28'-5 1/8"
B-F	48'-3 5/8"
C-E	19'-8 3/8"

N.S.P.I. TYPE II DIVING

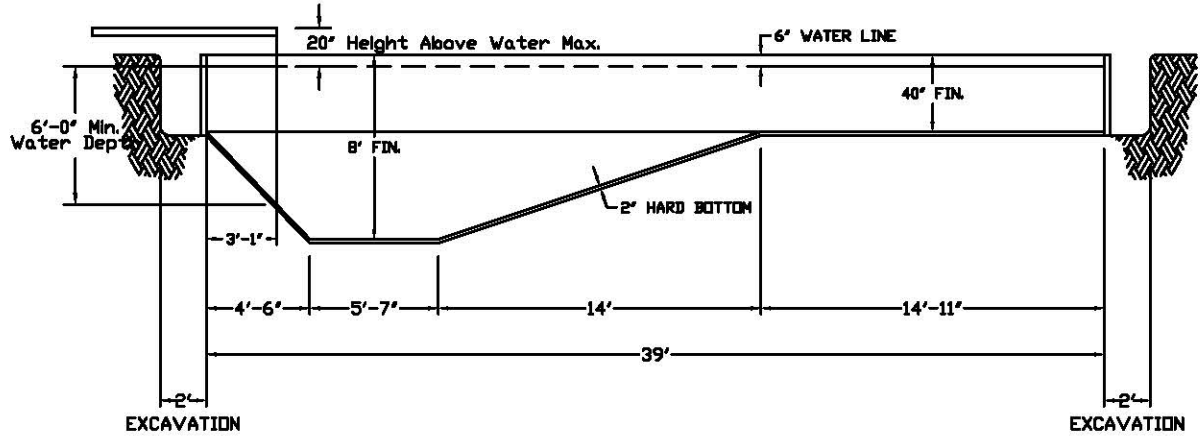

Classic Series

RoyalSwimmingPools.com
877-602-7067

18x39x26 SQUARE-L Right

DRAWN BY: NM	Revisions		PER.: 119' -8"
DATE: 02/02/07	1		S.A.: 800. 265 ft²
SCALE: NTS	2		VOL.:
DRAWING NUMBER: ALP1839RSL407			APPROVED: